Simon Stevinweg 6A
8013 NB Zwolle
Netherlands

+31(0)38 - 420 90 20
www.element4.nl
info@element4.nl

SUMMUM 100 3/S

SPECIFICATIONS

Burner(s):	Real Flame Burner M LED
Type of fireplace:	Gas fires
Net natural gas capacity (min-max) G25:	2,9 - 10,6 kW
Net natural gas capacity (min-max) G20:	2,7 - 11,4 kW
Net propane capacity (min-max) G31:	2,9 - 11,2 kW
Efficiency:	89%
Venting ø (mm):	130/200
Black steel:	(Standard)
Black reflective panels:	(Optional)
Connect to home automation:	(Optional)
Operation via app - wifi kit:	(Optional)
Powerfan:	(Optional)
Anti-reflective glass:	(Optional)
Access door:	(Optional)
Wall switch:	(Optional)
Remote control:	(Standard)
Convection grills built-in and surface-mounted:	(Optional)
Puck:	(Optional)
Energy efficiency class:	A
Website:	https://www.element4.nl/en/fireplace/summum-100-3s

Simon Stevinweg 6A
8013 NB Zwolle
Netherlands
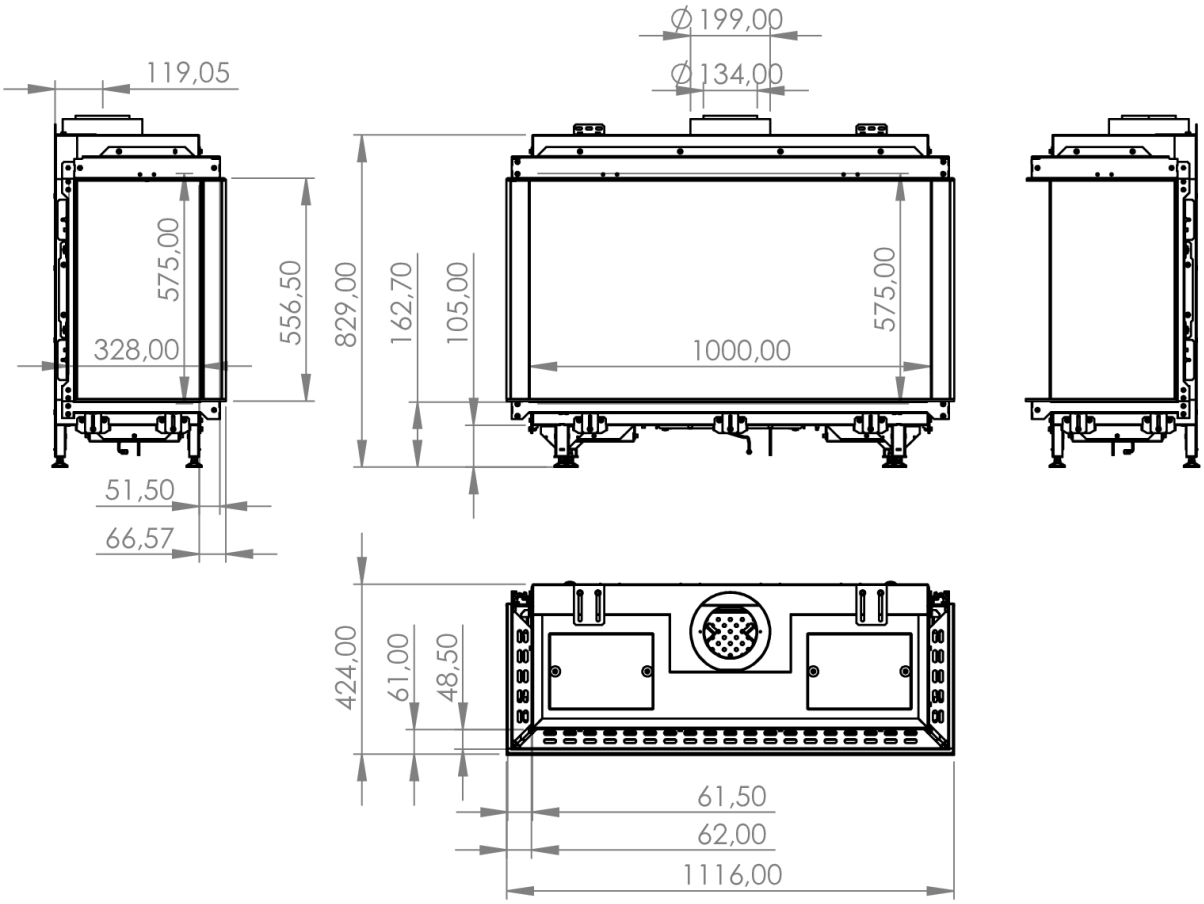
+31(0)38 - 420 90 20
www.element4.nl
info@element4.nl