Simon Stevinweg 6A
8013 NB Zwolle
Netherlands

+31(0)38 - 420 90 20
www.element4.nl
info@element4.nl

CLUB 50 E

SPECIFICATIONS

Type of fireplace:	Club series, Electric fires
Ultra HD effect:	Standard
Heat outputs:	1,5 kW
Ontspiegeld glas:	(Standaard)
Website:	https://www.element4.nl/en/fireplace/club-50-e

Simon Stevinweg 6A
8013 NB Zwolle
Netherlands
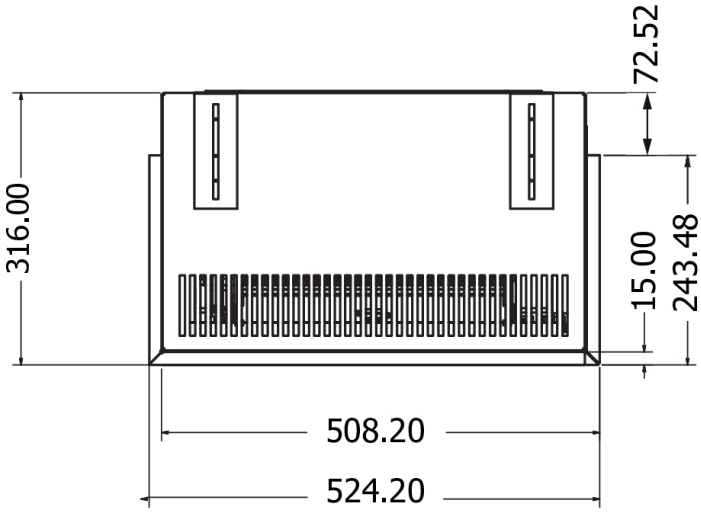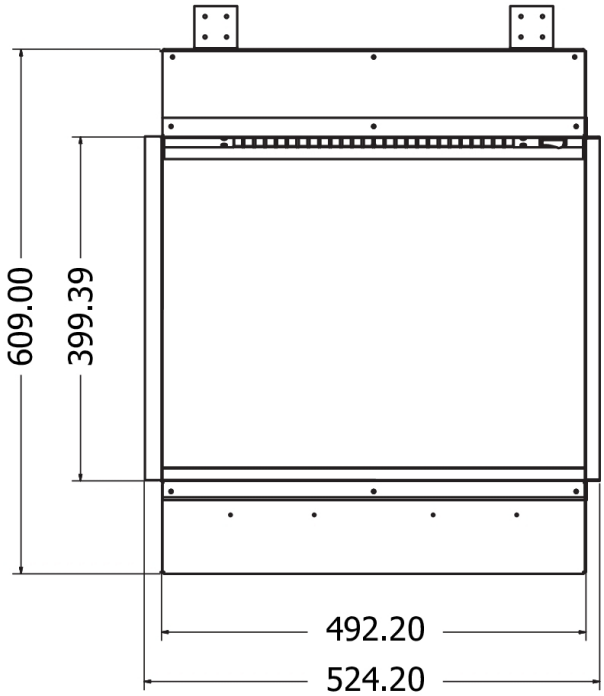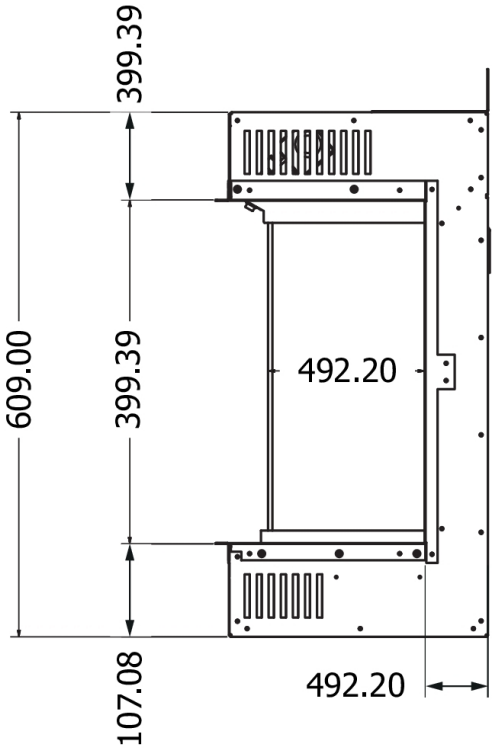
+31(0)38 - 420 90 20
www.element4.nl
info@element4.nl